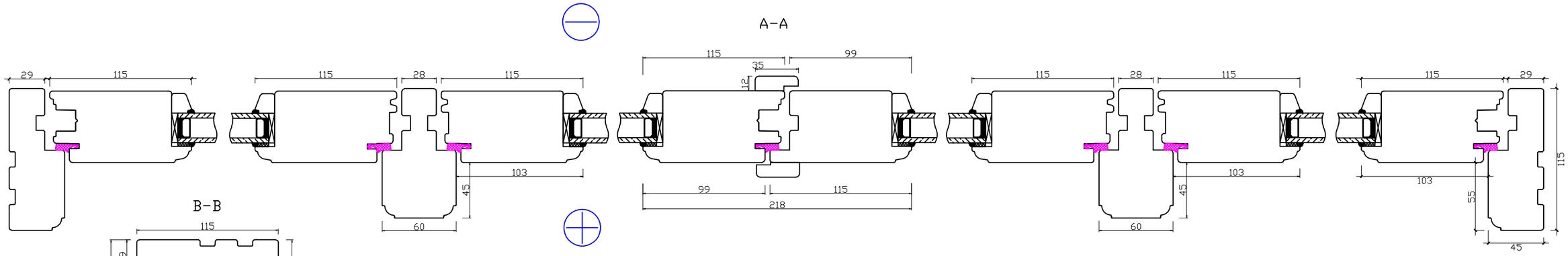

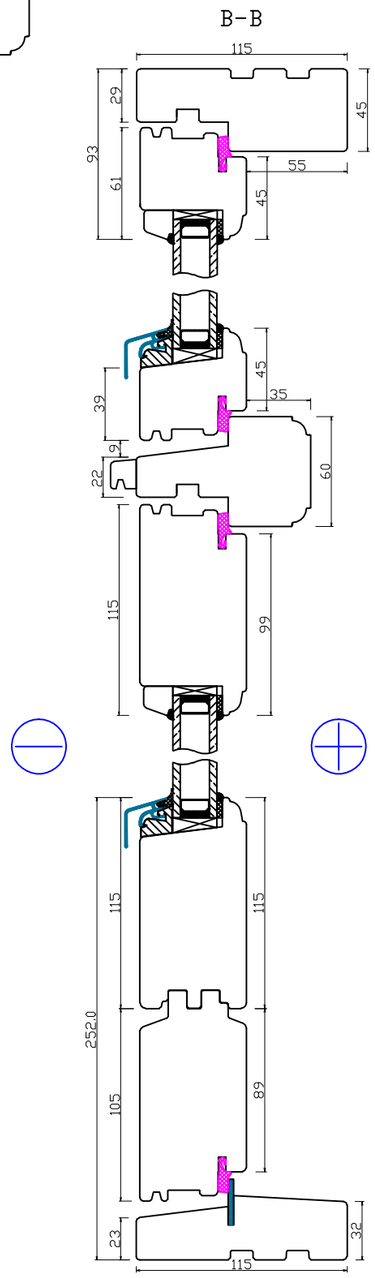

FLUSH HARDWOOD SILL

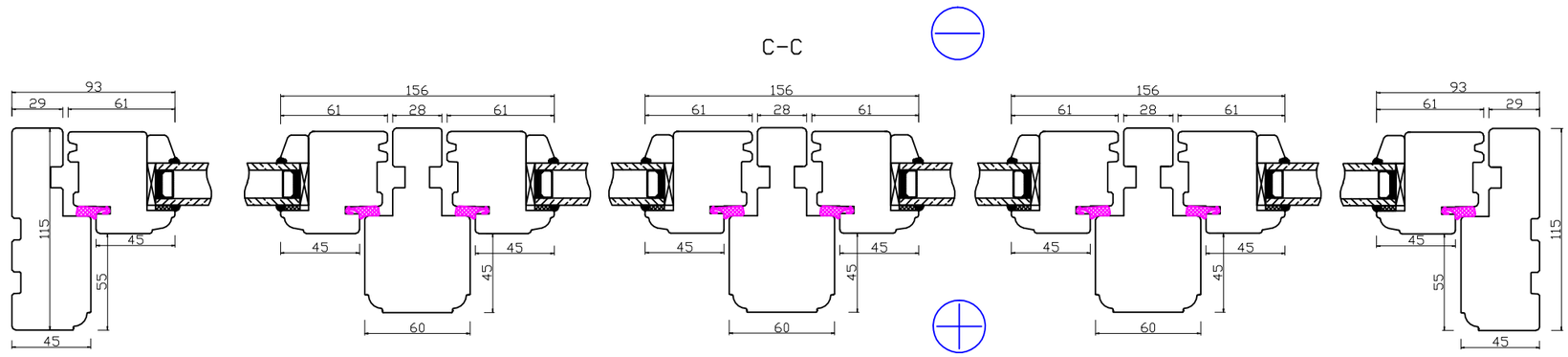

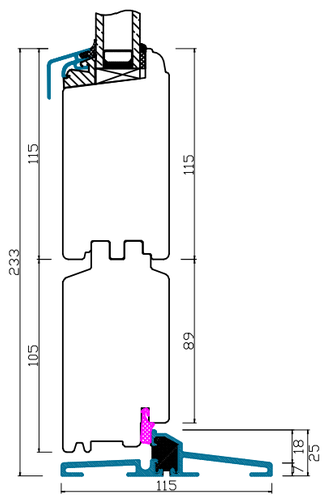

LOW ALUMINIUM THRESHOLD

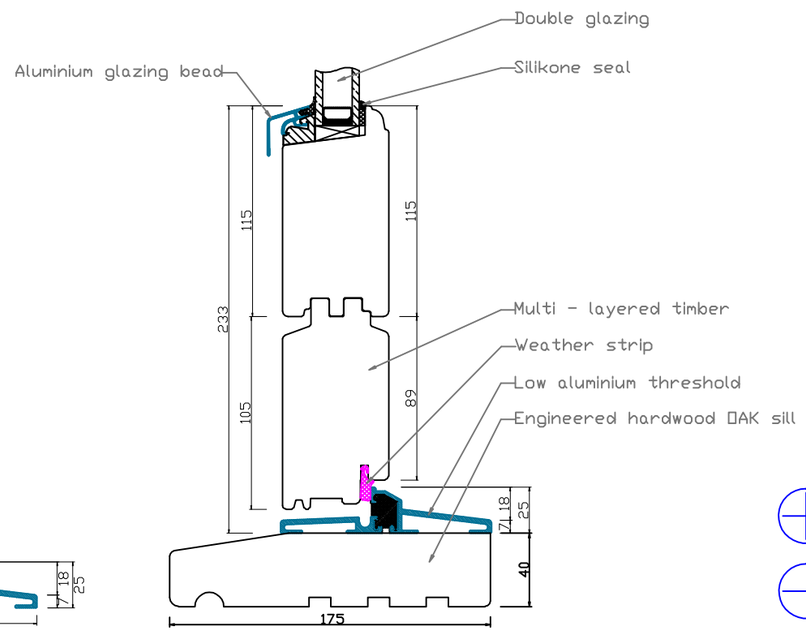

COMBINED ALUMINIUM - HARDWOOD SILL

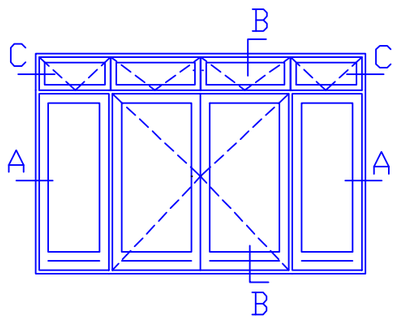

- INSIDE

- OUTSIDE

Natural Windows Ltd
10 Park Parade, Gunnersbury Avenue, London W3 9BD
www.naturalwindows.com info@naturalwindows.com

Object:

OUTSIDE OPENING FRENCH DOOR WITH SIDE LIGHTS AND TOP SWING WINDOWS

Client:

Quotation:

Date: