ROOF HATCH
QUANTITY:1 off
MATERIAL: ALUMINIUM
FINISH: SELF COLOUR
LOCKING OPTION: CABLOCK OPEN FROM INSIDE ONLY
OPENING: 1000x1000
APPROX COVER WEIGHT: 52 kg

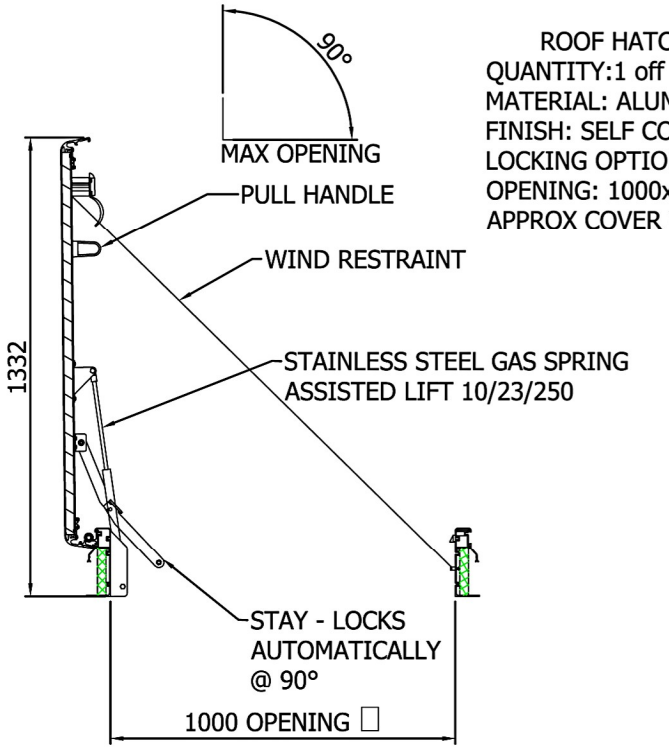

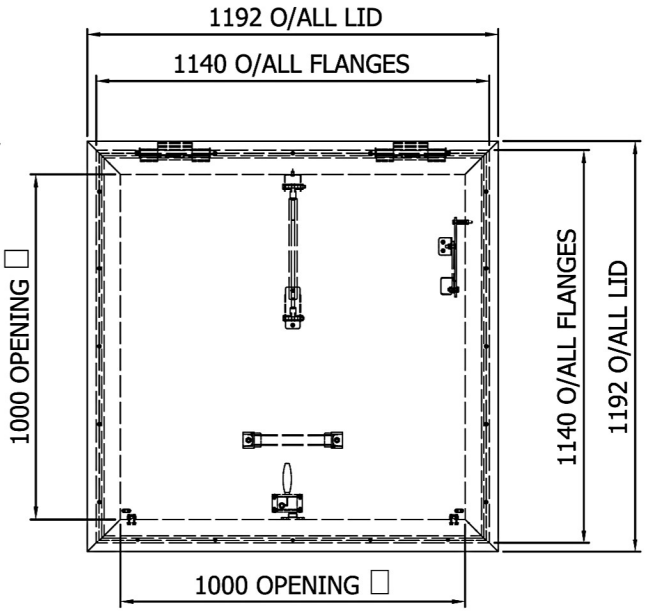

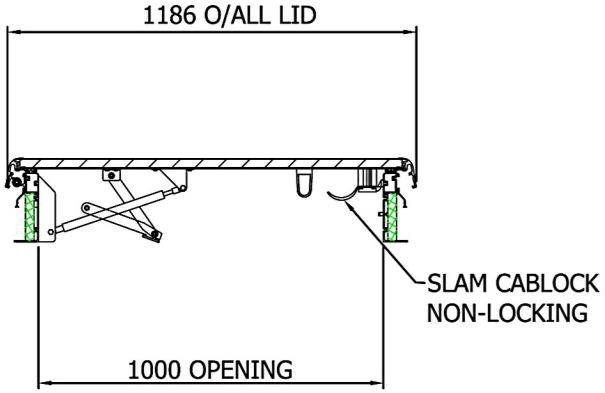

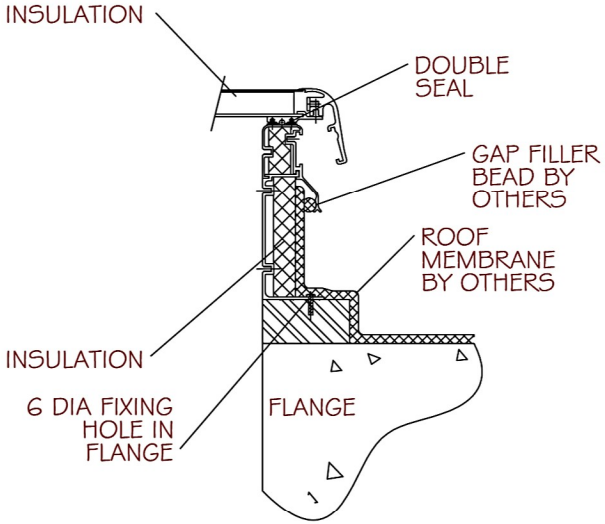

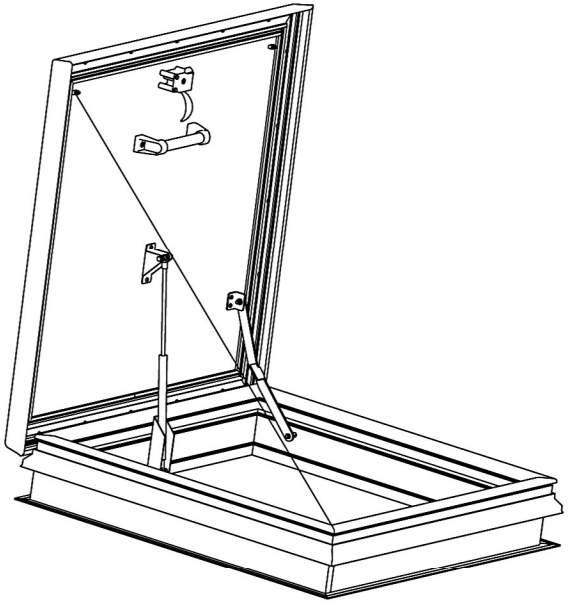

□ TICK TO CONFIRM SIZE

Copyright is claimed in this drawing and no copy may be made without prior written permission.
©

The article shown is also the subject of:
patent rights
registered design rights
unregistered rights
this drawing is a design document
patent pending

WIND RESTRAINTS SHOULD BE SPECIFIED ON ALL ACCESS HATCHES SUBJECT TO HIGH WIND CONDITIONS

THIS IS A MANUALLY OPERATED ACCESS HATCH/COVER & IT IS ESSENTIAL THAT SAFE MEANS OF ACCESS IS PROVIDED FOR THE OPERATOR

Designed by TS	-	-		
			Revision	Sheet 1 / 10